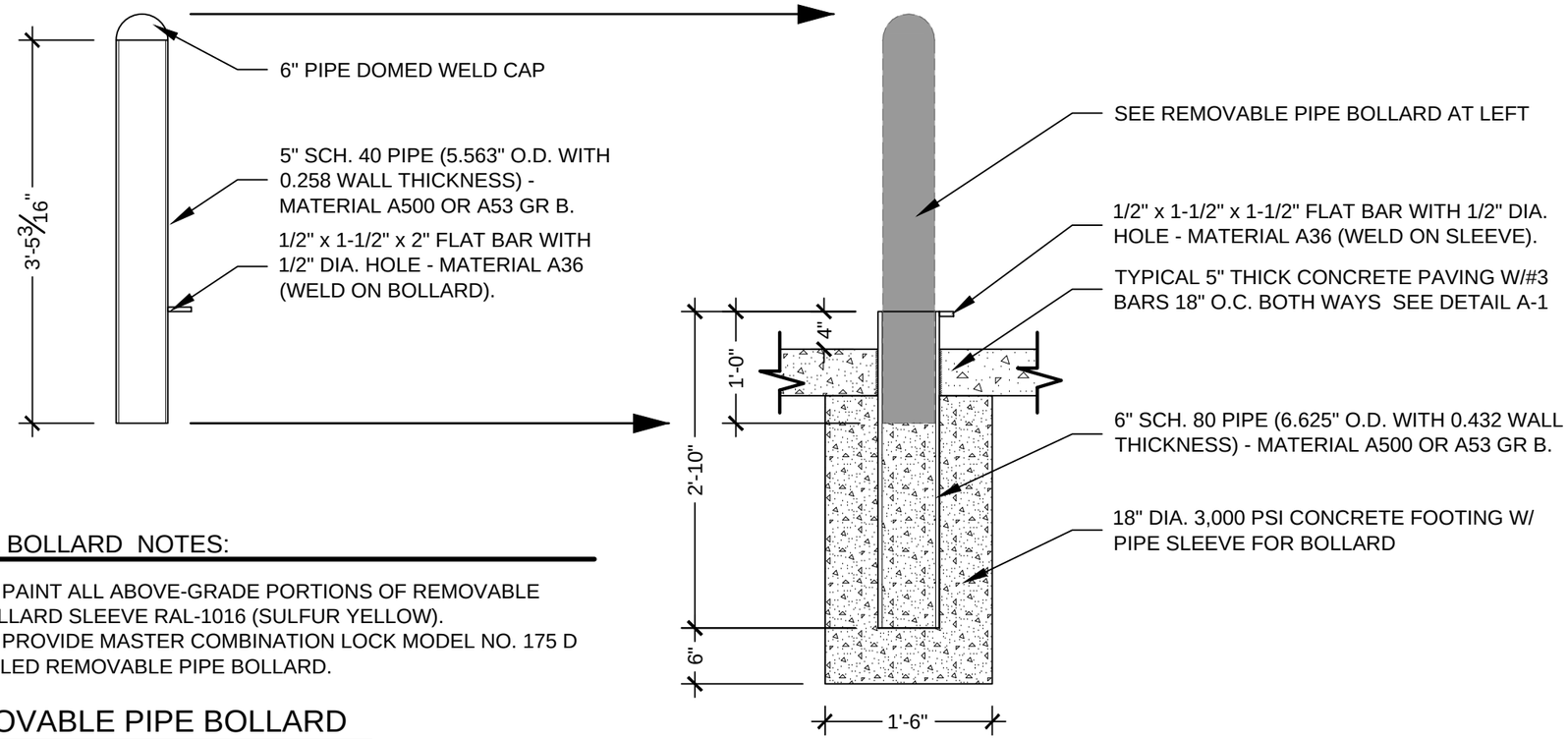

REMOVABLE PIPE BOLLARD NOTES:

1. CONTRACTOR TO PAINT ALL ABOVE-GRADE PORTIONS OF REMOVABLE BOLLARD AND BOLLARD SLEEVE RAL-1016 (SULFUR YELLOW).
2. CONTRACTOR TO PROVIDE MASTER COMBINATION LOCK MODEL NO. 175 D FOR EACH INSTALLED REMOVABLE PIPE BOLLARD.

REMOVABLE PIPE BOLLARD

SCALE: 3/8" = 1'-0"

PIPE BOLLARD SLEEVE

SCALE: 3/8" = 1'-0"

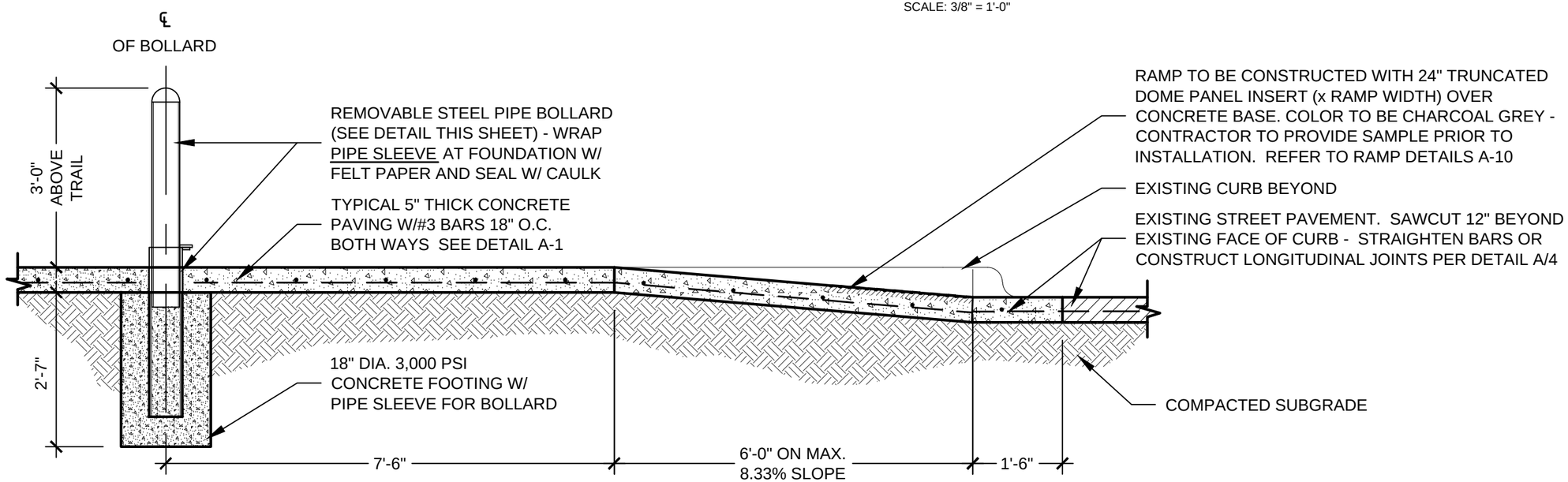

A/7 TRAIL RAMP SECTION AND REMOVABLE BOLLARD DETAIL

FOR TRAILS 10' OR GREATER

SCALE: 1/2" = 1'-0"

Department of Park and Recreation

City of Dallas
Texas

scale:
dsnd:
drawn:
approved:

Standard Construction Details
for
City of Dallas
Park and Recreation Department

Typical Construction Details
PAVEMENT & PARKING DETAILS

TRAIL RAMP SECTION AND REMOVABLE BOLLARD DETAIL

issue date

revisions

DETAIL A-7