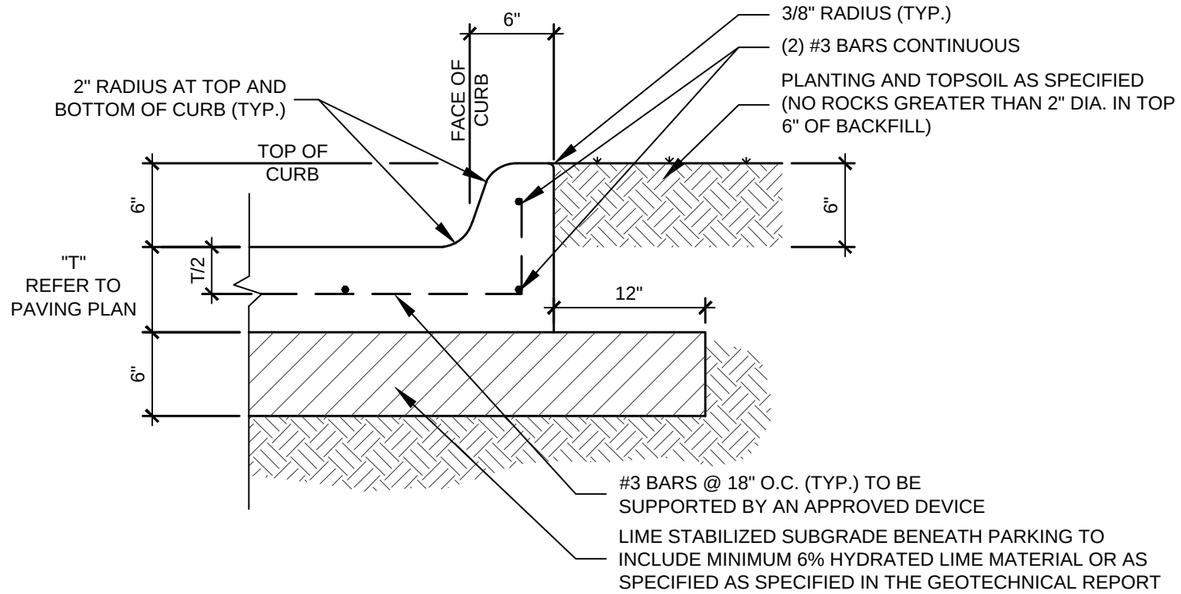

INTEGRAL CURB AND GUTTER DETAIL FOR ON-SITE PAVEMENT ONLY

NOT TO SCALE

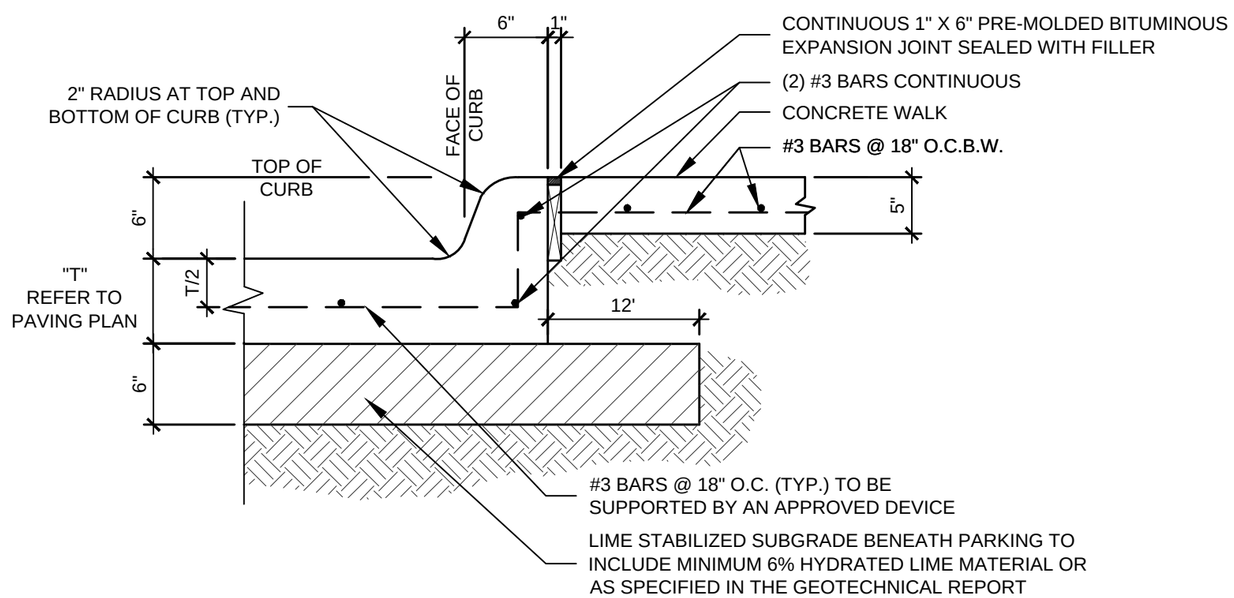

INTEGRAL CURB AND GUTTER W/ WALK DETAIL FOR ON-SITE PAVEMENT ONLY

NOT TO SCALE

A 17

PARKING LOT DETAILS

NOT TO SCALE

Department of Park and Recreation

City of Dallas
Texas

scale:
dsnd:
drawn:
approved:

Standard Construction Details
for
City of Dallas
Park and Recreation Department

Typical Construction Details
PAVEMENT & PARKING DETAILS

PARKING LOT DETAILS

issue date

revisions

DETAIL A-17